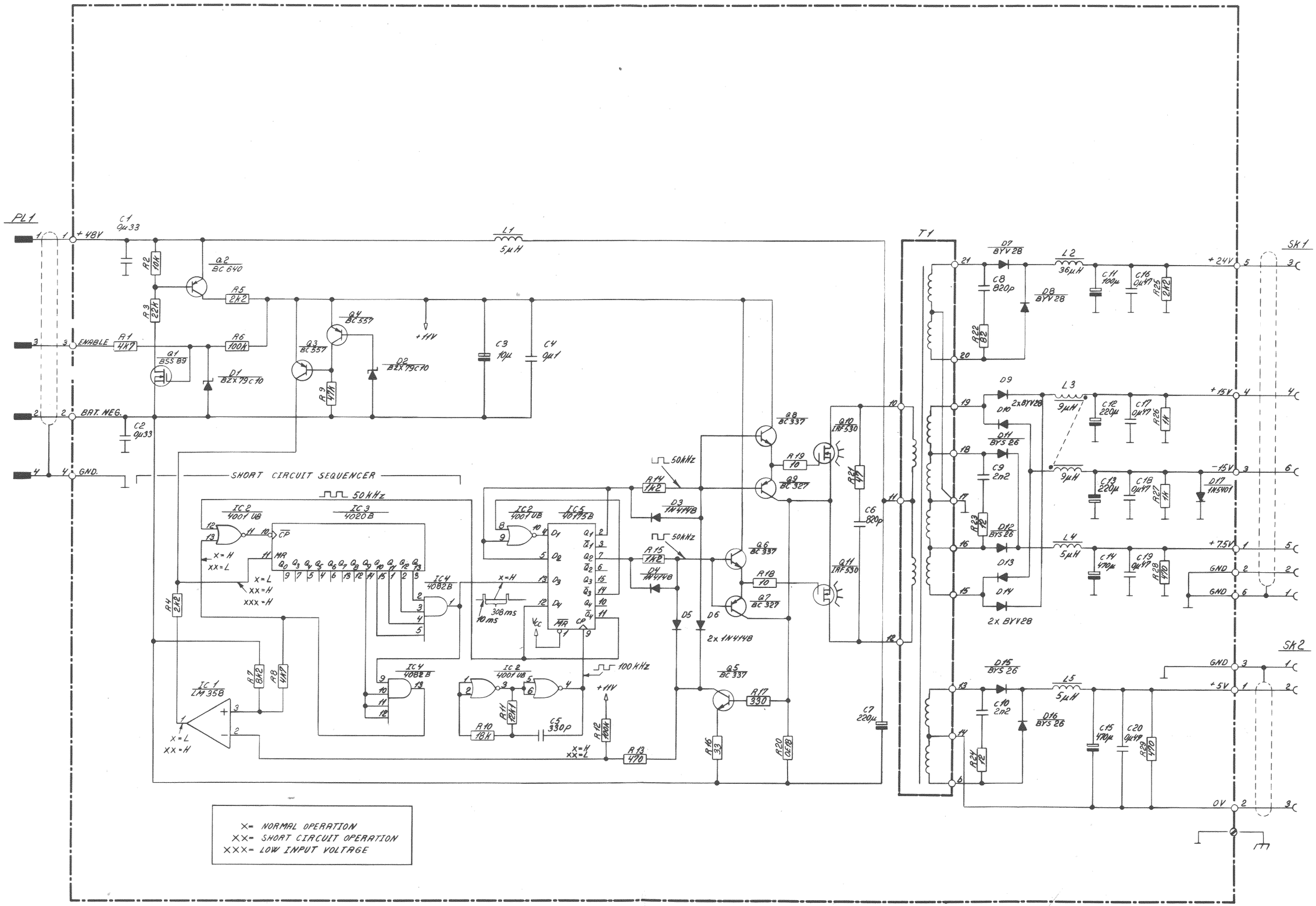

VOLTAGE CONVERTER BOARD 621 VERSION 1A